COMMERCIAL COLLECTION

Model S 6032 TS

Special Needs Series

SUBMITTAL DATA

FRONT VIEW

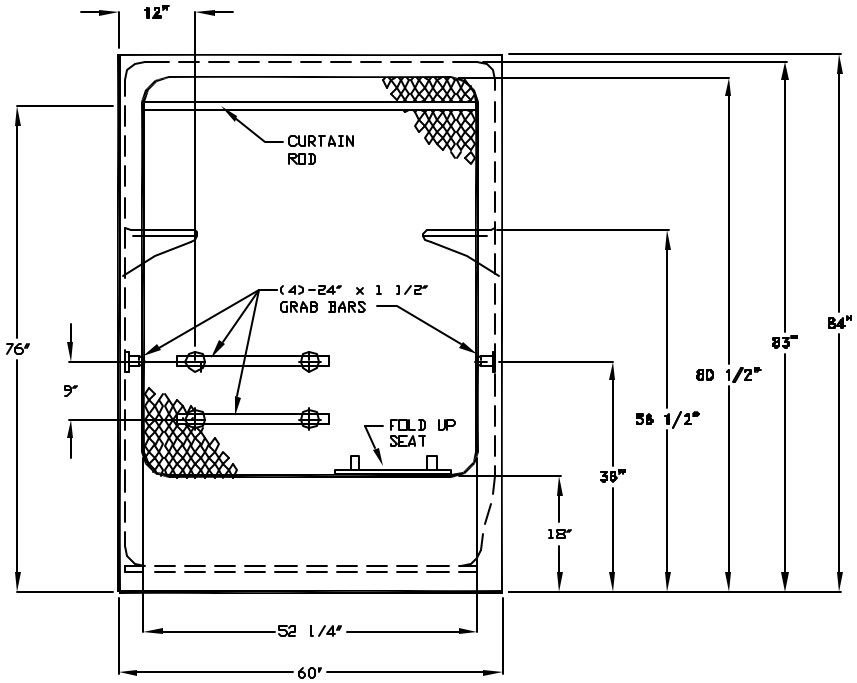

SIDE VIEW

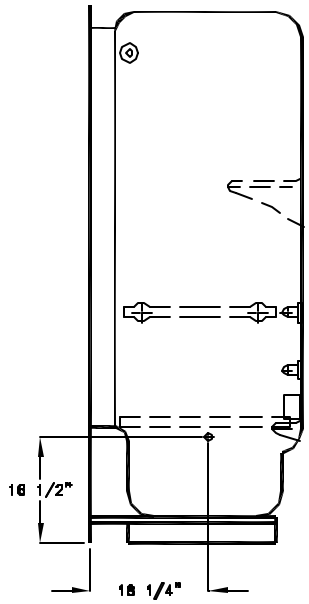

TOP VIEW

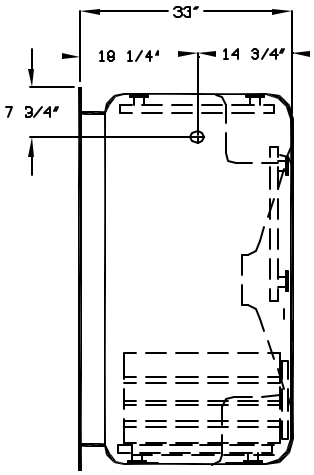

NOTE:
ROUGH IN DIMENSIONS: 58" x 34" x 84"

DUE TO THE NATURE OF THE MATERIALS INVOLVED, UNIT DIMENSIONS MAY VARY ±1/2 INCH.

Job Name:		AQUARIUS
Model No.:		Drawing#: S6032TS
Approved by:	Date Approved:	Date: 7-18-96 Revised: 6-4-02
Rep.:	Wholesaler:	Quote No.:

PRAXIS INDUSTRIES, LLC.
ROUTE 1, BOX 46D - SAVANNAH, TN 38372
1 (800) 443-7269 - FAX (731) 925-4290